VIVOTEK SD83XXE Speed Dome

Mounting Accessories

AM-116/117 Pendant Pipe
AM-118 Pendant Head
AM-221 Gooseneck
AM-231 Parapet Mount
AM-519 Pendant Adaptor

Installation Guide

Corresponding part numbers:

AM-116:	900014300G
AM-117:	900014400G
AM-118:	900014600G
AM-221:	900014800G
AM-231:	900015000G
AM-519:	900014900G

Rev. 1.1

Revison History:

Rev. 1.0: Initial release
Rev. 1.1: Adding corresponding ordering part numbers and supported speed dome models.

I Compatible VIVOTEK Cameras

Speed Dome	**SD8364E, SD8363E, SD8333E, SD83x4E, SD83x6E, SD8362E**

II Mechanical Drawings

AM-118 Pendant Head

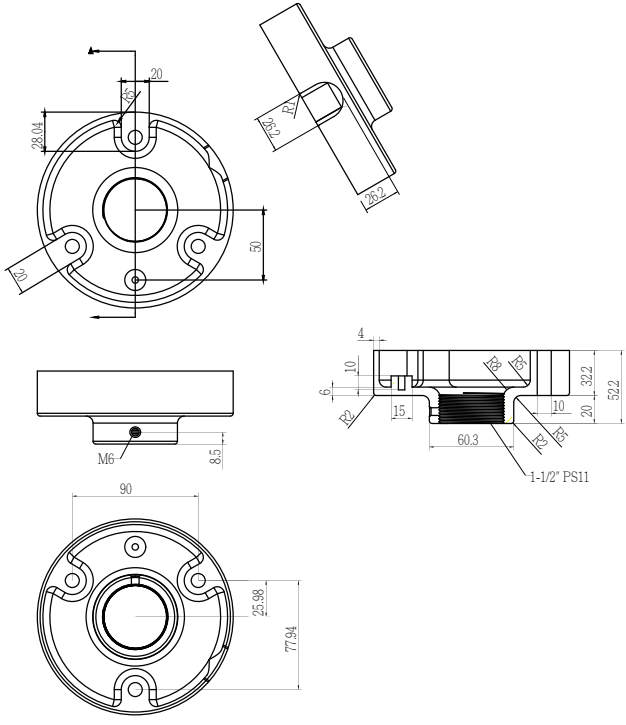

AM-116 20cm Pendant Pipe

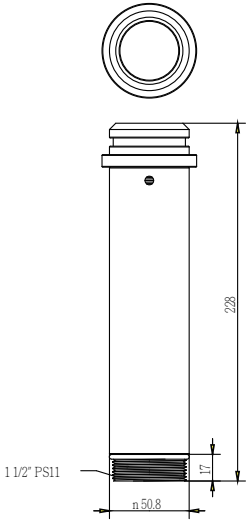

AM-117 40cm Pendant Pipe

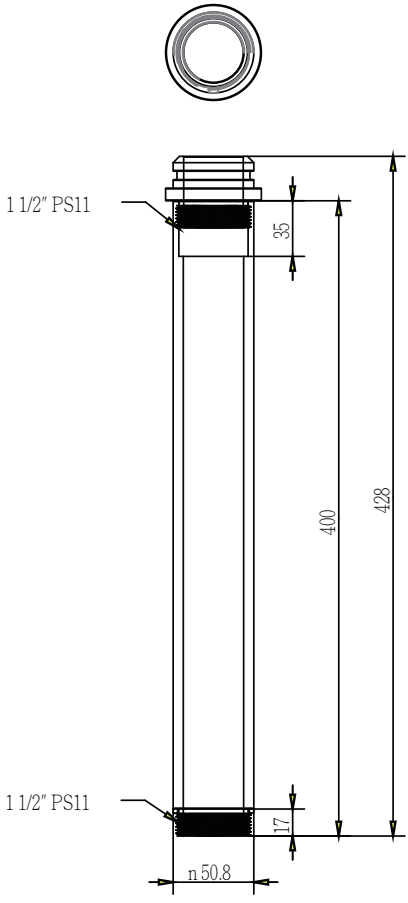

AM-519 Pendant Adapter
(comes with the network camera)

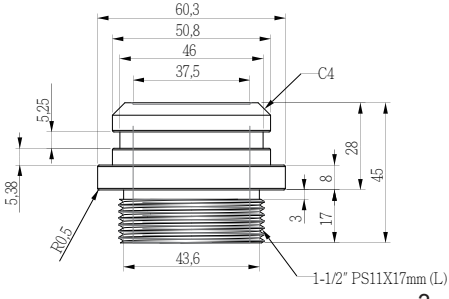

AM-221 Gooseneck

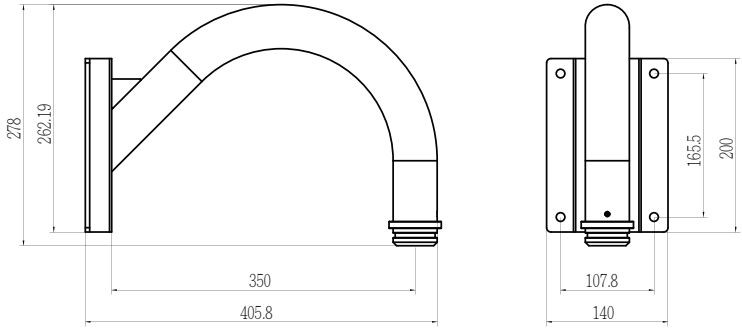

AM-231 Parapet Mount

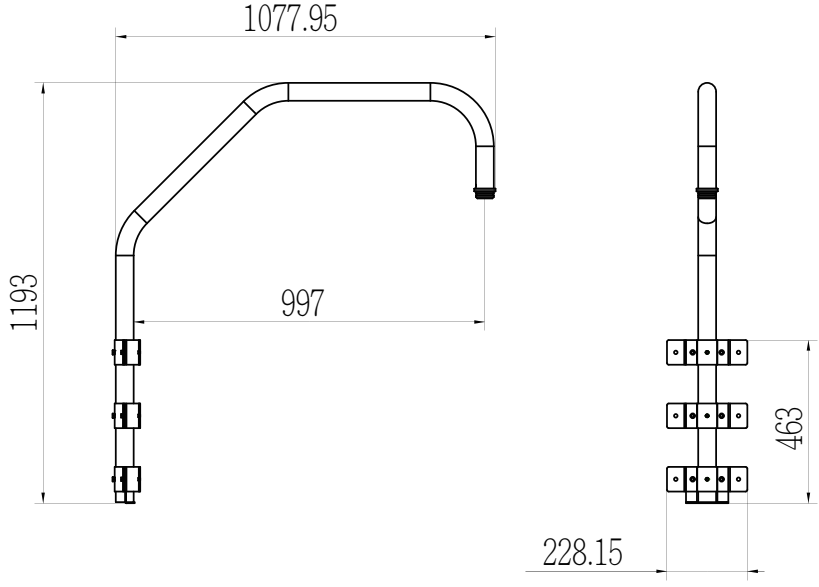

AM-231 Parapet Corner Mount

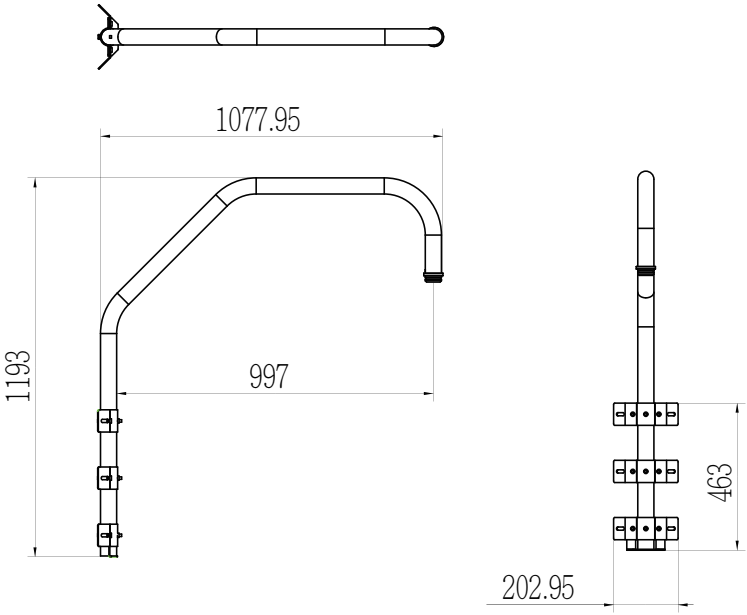

AM-231 Parapet Mount - Alignment Sticker

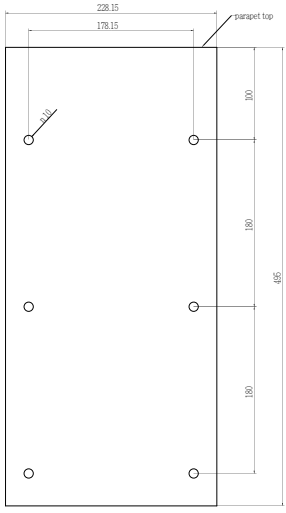

AM-231 Corner Mount - Alignment Sticker

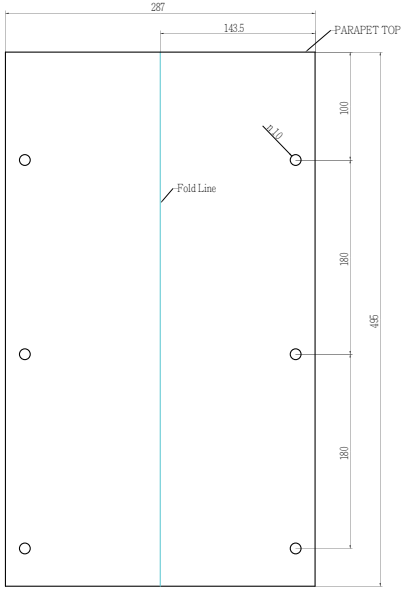

III Preparation before Installation

Connect Ethernet cable and IO wires (this may include the AC24V wires) to the interface section of the camera, and then combine the interface section with the dome cap. Note that you must route cables through the waterproof connector and the rubber seal plug, and install them to the dome cap. Please refer to the Quick Installation Guide for details.

Cabling should be done before mounting the camera.

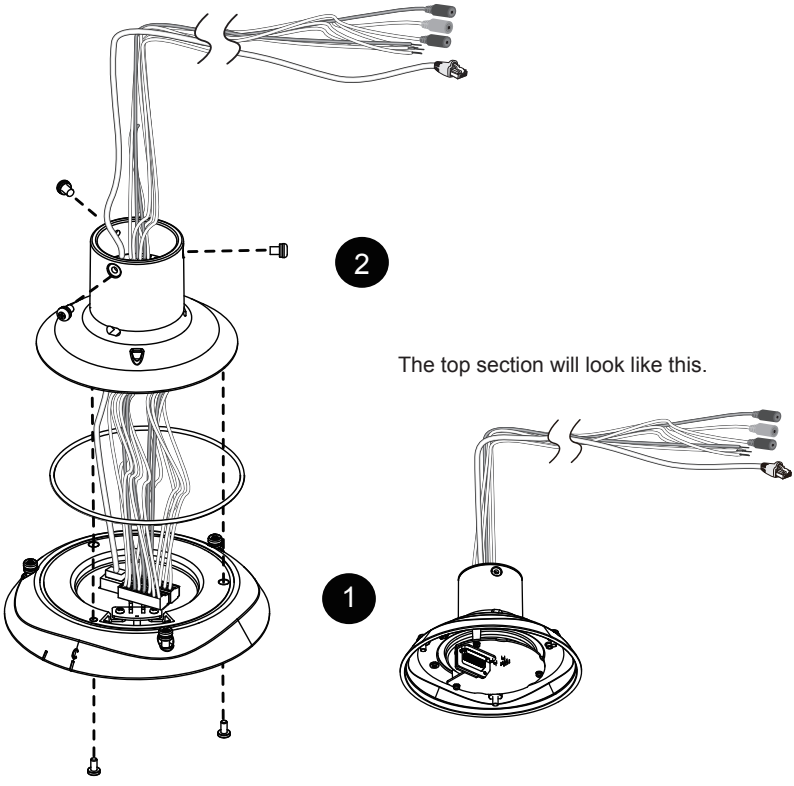

The top section will look like this.

IV Mounting & Cabling

IV-1. Pendant Pipe Mounting: AM-116/-117 & AM-118

Shown below are the dimensions of a pendant mount configuration using the 40cm pendant pipe.

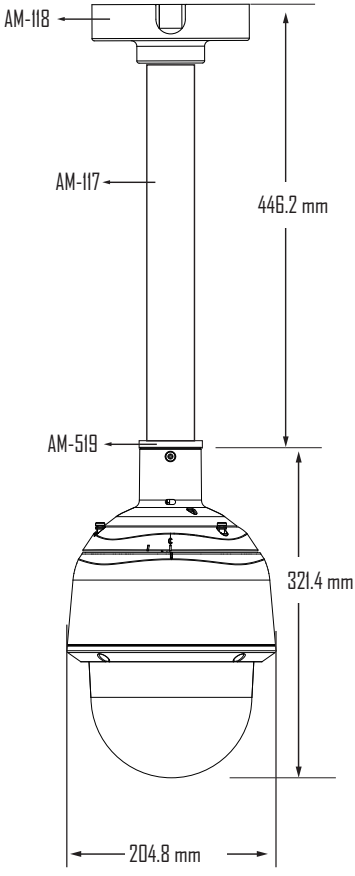

IV-1-1. Pendant Mount without Pendant Pipe: AM-118

Below are the sample procedures using a pendant head and pendant pipe:

1. Determine a hard surface ceiling location, and use the alignment sticker to mark the positions where holes will be drilled to secure the pendant head. Hammer the anchors into the ceiling.

   Note that mounting holes should be 10mm in diameter and 60mm deep. The included screws are M6.2 x75mm.

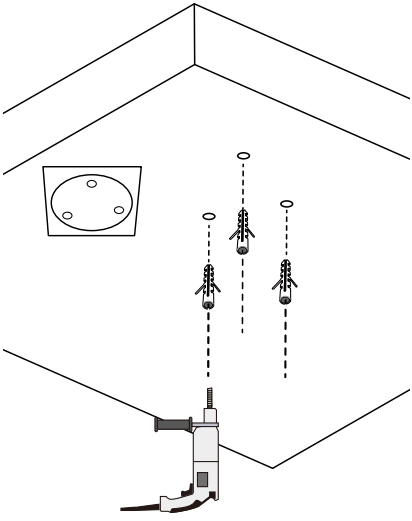

2. Install a pendant adapter (AM-519) by turning it clockwise to the pendant head, and secure the connection using an included 3mm hex wrench.

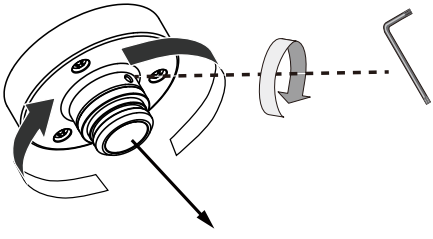

3. Route power lines and other wires through the pendant head. You may apply a 1 inch conduit.
4. Secure the pendant head to ceiling by driving screws through its mounting holes. Depending on the length of your cables, you may need the help from your colleague for holding the camera top section.

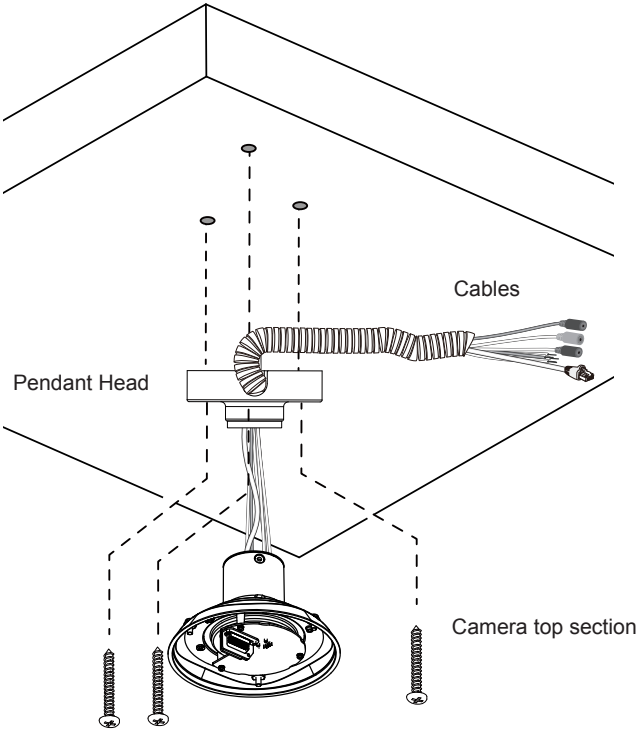

5. Secure the camera's top section to the pendant head by fastening 3 M5x8 screws. When done, secure the connection using an included 3mm hex wrench.

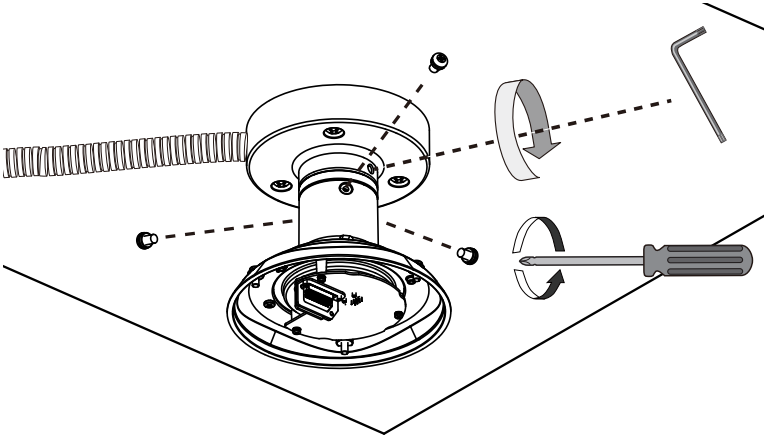

6. Install the camera to the top section. See your Quick Installation Guide or page 15 for details.

IV-1-2. Pendant Mount with Pendant Pipe: AM-116/AM-117 & AM-118

Below are the sample procedures using a pendant head and pendant pipe:

1. Determine a hard surface ceiling location, and use the alignment sticker to mark the positions where holes will be drilled to secure the pendant head. Hammer the anchors into the ceiling.

   Note that mounting holes should be 10mm in diameter and 60mm deep. The included screws are M6.2 x75mm.

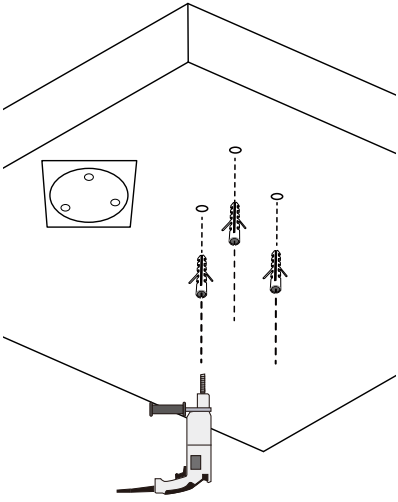

2. Install a 20cm or 40cm pendant pipe (AM-116 or AM-117) by turning it clockwise to the pendant head, and secure the connection using an included 3mm hex wrench.

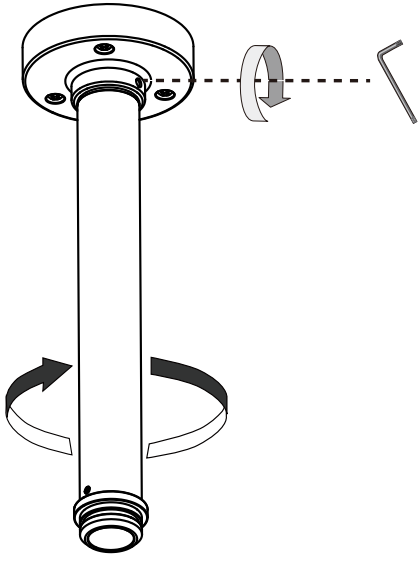

3. Route power lines and other wires through the pendant head. You may apply a 1 inch conduit.
4. Secure the pendant head to ceiling by driving screws through its mounting holes. Depending on the length of your cables, you may need the help from your colleague for holding the camera top section.

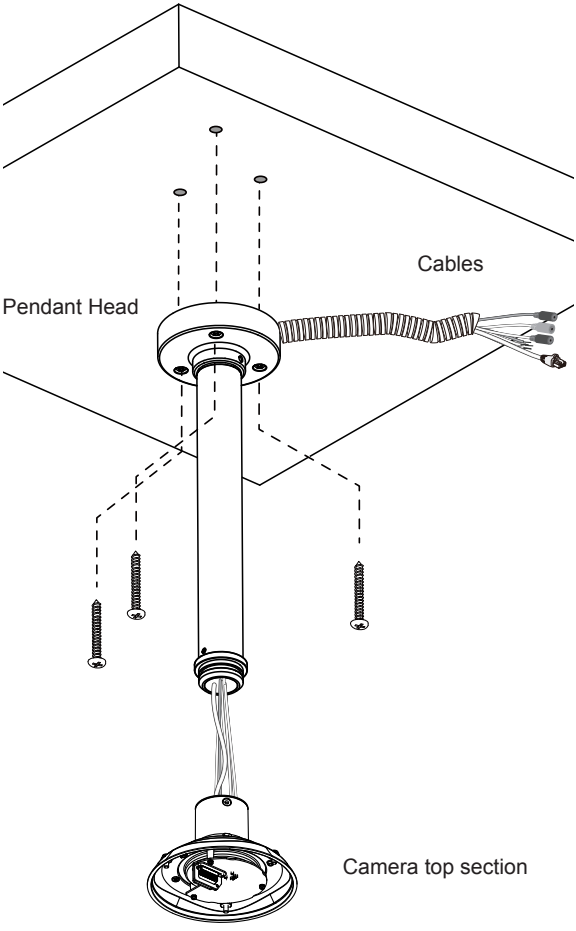

5. Secure the camera's top section to the pendant head by fastening 3 M5x8 screws.

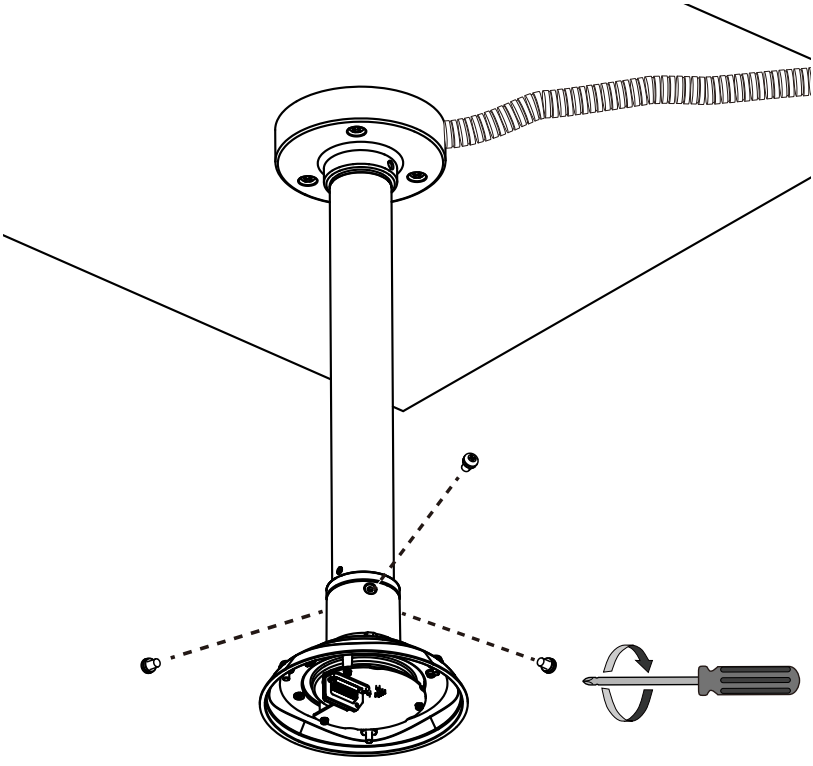

6. Install the camera to the top section. See your Quick Installation Guide or page 15 for details.

IV-2. Gooseneck Mounting: AM-221

Below is a sample procedure using a gooseneck bracket:

1. Determine a hard surface wall location. Use the alignment sticker to mark the positions where holes will be drilled for the gooseneck bracket.
2. Drill 4 pilot holes (10mm in diameter and 5.5cm deep) into the wall, and then hammer in threaded anchors. Note that you should hammer the anchors with hex nuts on them so that the threaded poles will not be deformed! If preferred, drill another hole for routing cables.
3. Secure the wall mount bracket to wall using 4 sets of lock washers and nuts.
4. Attach the top section (dome cap and interface section) of the camera to the gooseneck bracket

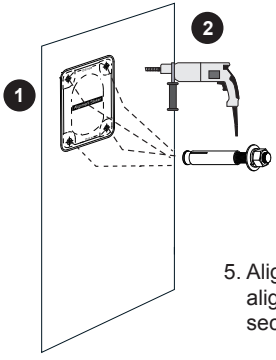

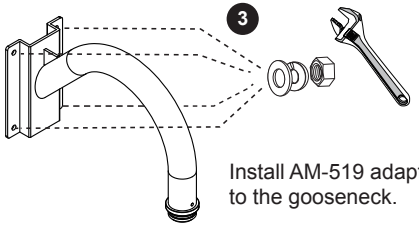

Install AM-519 adaptor to the gooseneck.

5. Align the camera body with the top section. Align the alignment mark on the camera with that on the interface section. Push the camera up to match the top section.

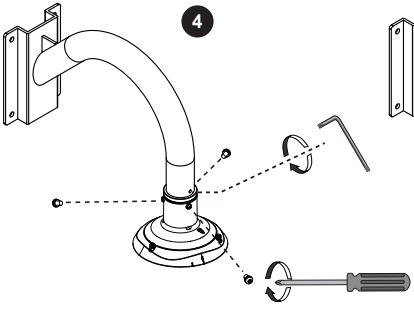

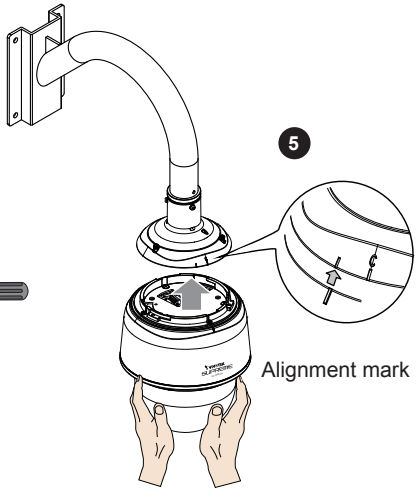

6. Rotate the camera clockwise until its alignment mark is aligned with the "C" mark.
7. Use the included T25 stardriver to tighten the 3 anti-tamper screws from the top. Make sure all parts have been securely tightened.

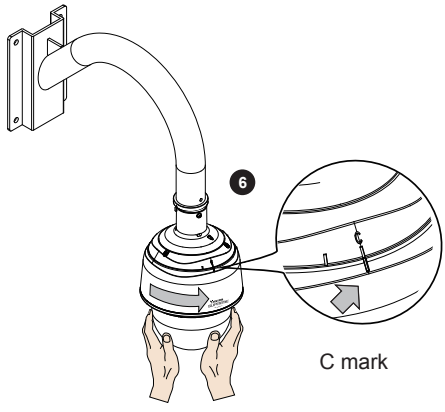

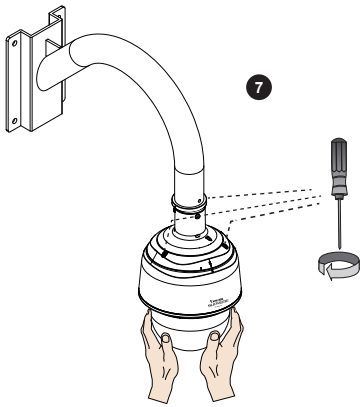

The dimensions of the gooseneck installation are shown below.

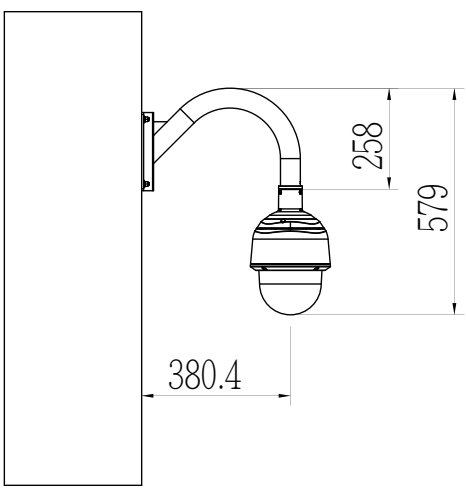

IV-3. Parapet Mounting: AM-231

The screws included in the parapet set are:	
Sleeve anchors 5/16" x3"	6
Hex bolts M8x25	6
Hex bolts M8x70	3
Hex lock nuts M8	6
Washers M8	15
Lock washers M8	15

⚠ IMPORTANT:

The parapet wall should have a concrete strength of 4000 PSI or higher. Each sleeve anchor can withstand an 800kgs pull-out force.

The parapet bracket is designed for installation on the inside of a parapet. Note the following before you start to install:

1. There must be a clearance of 65mm between the upper edge of the parapet wall and the metal bracket fixed to the wall. You can flush align the upper edge of the alignment sticker with the edge of a parapet wall.
2. At least two inches of space should be available below the parapet bracket for routing cables.

The space requirements for a parapet mount are shown below:

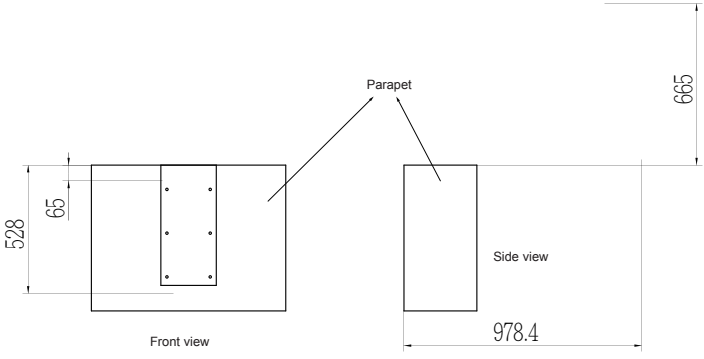

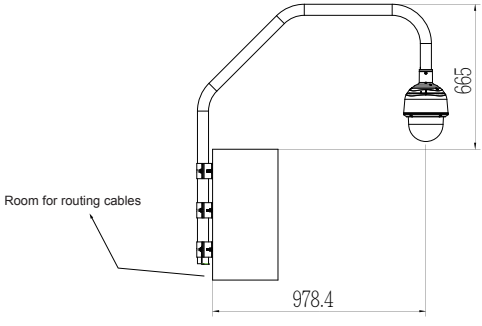

Below is a sample procedure using the parapet mount bracket:

1. Determine a hard surface location. Use the alignment sticker to mark the positions where holes will be drilled for the bracket.
2. Drill 6 pilot holes (10mm in diameter and 5.5cm deep) into the wall, and then hammer in the sleeve anchors. Note that you should hammer the anchors with hex nuts and washers on them so that the threaded poles will not be deformed!

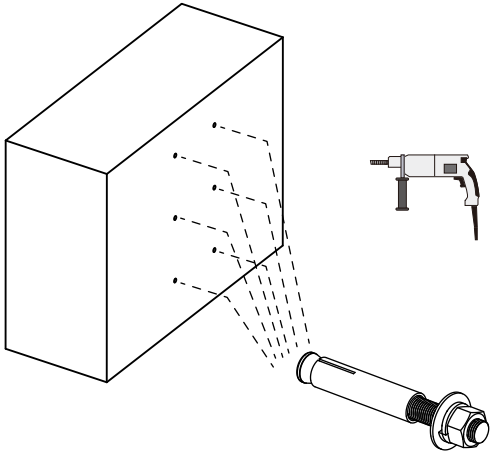

3. Install the brackets to wall using the hex nuts and washers from the sleeve anchors.

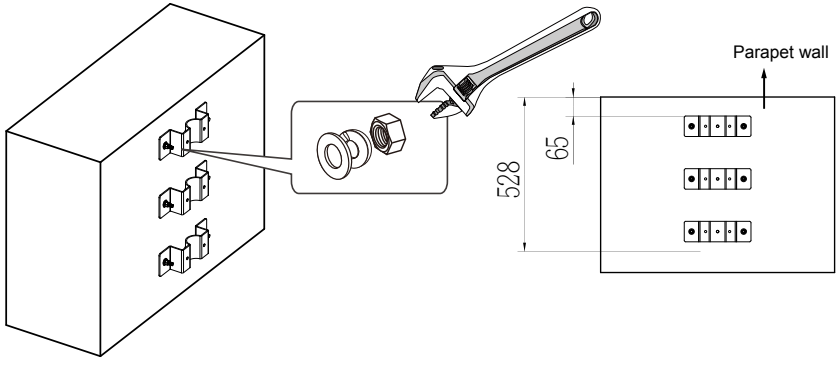

NOTE:

If you install the corner parapet bracket, use the included alignment sticker, and mark the drill holes through the mounting slots on the brackets.

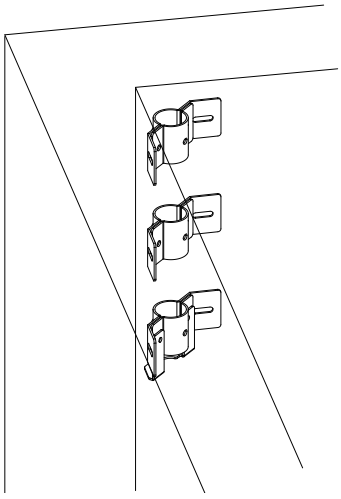

4. Use a crescent wrench to secure the outer brackets to the brackets on the wall using the M8x25 hex bolts and washers. Do not completely tighten the bolts yet! When the speed dome is installed to the mount pipe, it needs to be swiveled out to the desired position.

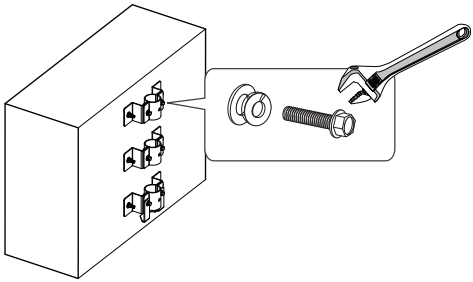

5. Install the AM-519 adapter to the parapet pipe.

6. Feed cables through the pipe arm. The cable length for passing through the pipe arm is 250cm at least. You can pass a rigid copper wire through the pipe arm first, and use it to pull other wires through the pipe.

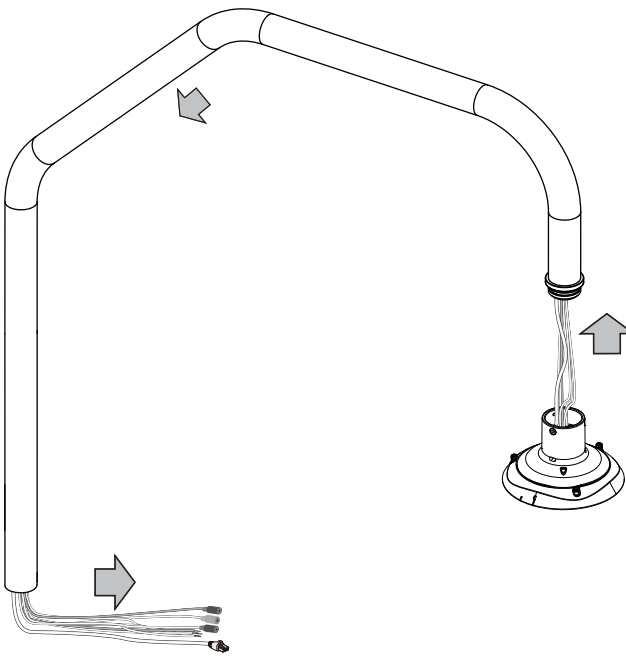

7. Install the top section of the camera to the pipe arm by driving 3 M5 x8 screws.

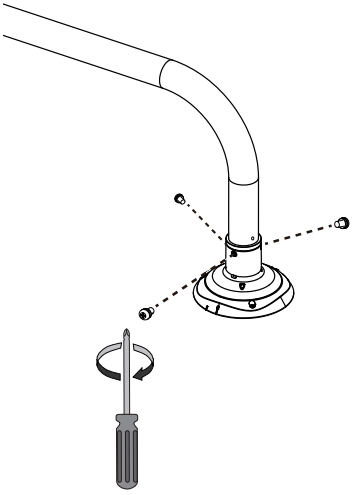

8. Insert the pipe arm into the round openings on the brackets until it is rested on the bottom bracket.

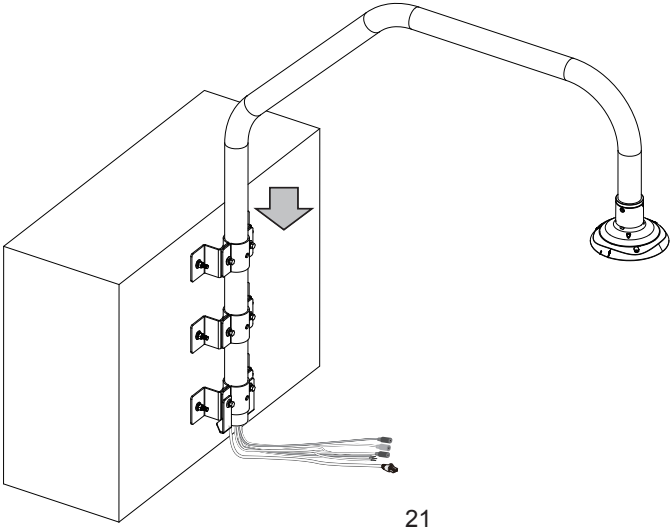

9. Install the camera to the top section. For installation details, refer to the Quick Installation Guide or page 15 in this document.

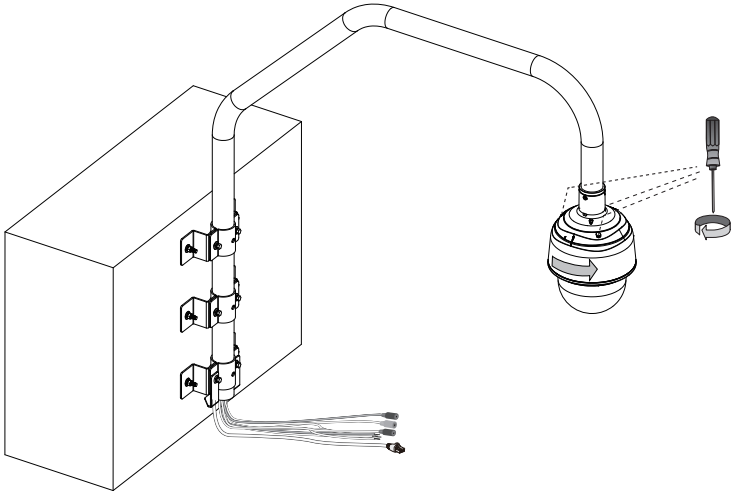

10. Swivel the pipe arm outwards to the opposite position. Use the M8 x70 bolts to secure the pipe arm to the brackets. You also need to tighten the M8 x25 bolts between the inner and outer brackets.

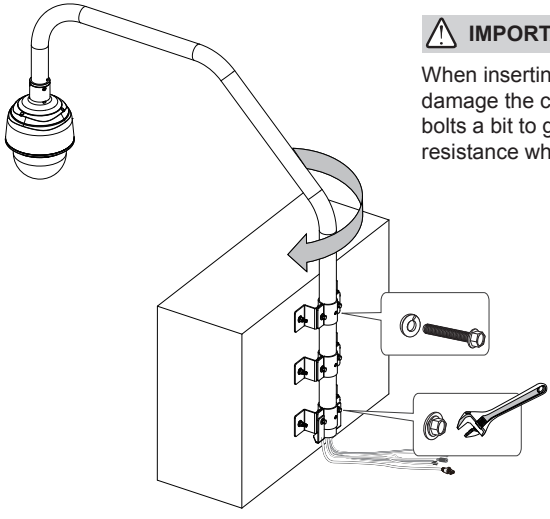

⚠ IMPORTANT:

When inserting the M8 bolts, you may damage the cables inside. Try twist the bolts a bit to get around cables if you feel resistance when inserting through the pipe.

A corner parapet installation should look like this when its installation is completed.

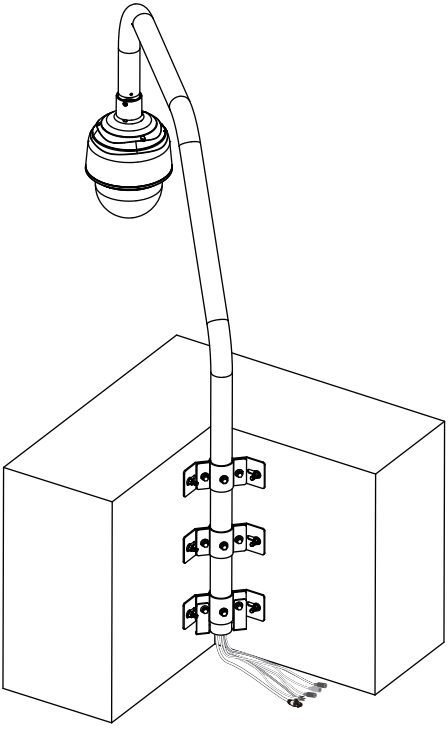

This page is intentionally left blank.