IGS-5227-6MT

Industrial IP67-rated 6-Port 10/100/1000T M12 Managed Ethernet Switch (-40~75 degrees C, A-coded M12)

Rugged Enough to Withstand Interferences for Smooth Operation

PLANET IGS-5227-6MT Industrial Managed Ethernet Switch comes with an IP67-rated industrial case, 6-port 10/100/1000T and **static Layer 3 routing**, providing a high level of immunity against electromagnetic interference and heavy electrical surges which are usually found on plant floors or in curb-side traffic control cabinets. The IGS-5227-6MT can be easily mounted on a DIN rail or wall taking up less space. It provides a quick, safe, cost-effective and high-performance Ethernet network solution to IP security surveillance for small businesses and enterprises.

Waterproof and Dustproof M12 Ethernet Connector

The IGS-5227-6MT is equipped with a 6-port 10/100/1000BASE-T auto-negotiation waterproof and dustproof M12 connector. The M12 connector provides tight and strong connection that guarantees stable Ethernet operation performance under high vibration and shock environment. It comes with the industrial protection rating of IP67 capable of withstanding humidity, dirt, dust, shock, vibrations, heat and cold.

Physical Port

- **6-port 10/100/1000BASE-T waterproof** and **dustproof** M12 connectors

Hardware Conformance

- IP67-rated aluminum case
- Redundant power design
  - **9** to **48**V DC, redundant power with polarity reverse protect function
  - Active-active redundant power failure protection
  - Backup of catastrophic power failure on one supply
  - Fault tolerance and resilience
  - 24V AC power input acceptable
- DIN-rail and wall-mount design
- Supports Ethernet ESD protection of 6000V DC
- -40 to 75 degrees C operating temperature

Layer 3 IP Routing Features

- Supports maximum 32 static routes and route summarization

Layer 2 Features

- Prevents packet loss with back pressure (half-duplex) and IEEE 802.3x pause frame flow control (full-duplex)
- High performance of Store-and-Forward architecture, and runt/CRC filtering that eliminates erroneous packets to optimize the network bandwidth
- Storm control support
  - Broadcast/Multicast/Unicast
- Supports VLAN
  - IEEE 802.1Q tagged VLAN
  - Up to 255 VLANs groups, out of 4095 VLAN IDs
  - Provides Bridging (VLAN Q-in-Q) support (IEEE 802.1ad)
  - Private VLAN Edge (PVE)
  - Protocol-based VLAN
  - MAC-based VLAN
  - IP subnet-based VLAN
  - Voice VLAN
- Supports Spanning Tree Protocol
  - IEEE 802.1D Spanning Tree Protocol (STP)
  - IEEE 802.1w Rapid Spanning Tree Protocol (RSTP)
  - IEEE 802.1s Multiple Spanning Tree Protocol (MSTP), spanning tree by VLAN
  - BPDU Guard

Environmentally Hardened Design

The IGS-5227-6MT is able to protect itself from dust and water ingress, and to operate under the temperature range from **-40 to 75 degrees C**. All these features ensure the highest level of reliability for mission-critical applications in any difficult environment.

Dual Power Input for High Availability Network System

The IGS-5227-6MT features a strong dual power input system **(Dual 9V~48V DC, 24V AC)** incorporated into customer's automation network to enhance system reliability and uptime. For example, when DC Power 1 fails to work, the hardware failover function will be activated automatically to keep powering the IGS-5227-6MT via DC Power 2 alternatively without any loss of operation.

SMTP/SNMP Trap Event Alert

Though most NVR or camera management software offers SMTP email alert function, the IGS-5227-6MT further provides event alert function to help to diagnose the abnormal device owing to whether or not there is a break of the network connection or loss of power.

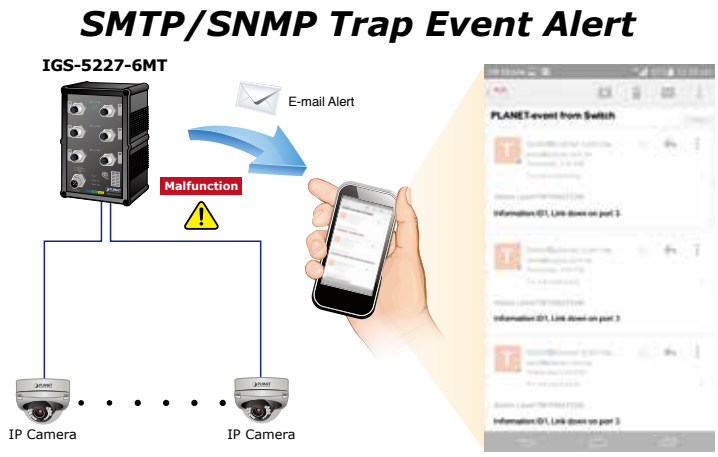

- Supports **Link Aggregation**
  - 802.3ad Link Aggregation Control Protocol (LACP)
  - Cisco ether-channel (static trunk)
  - Maximum 3 trunk groups, with 2 ports for each trunk
  - Up to 4Gbps bandwidth (full duplex mode)
- Provides port mirror (many-to-1)
- Port mirroring monitors the incoming or outgoing traffic on a particular port
- Loop protection to avoid broadcast loops
- Supports E.R.P.S. (Ethernet Ring Protection Switching)
- IEEE 1588 and synchronous Ethernet network timing

Quality of Service

- Ingress shaper and egress rate limit per port bandwidth control
- 8 priority queues on all switch ports
- Traffic classification
  - IEEE 802.1p CoS
  - ToS/DSCP/IP precedence of IPv4/IPv6 packets
  - IP TCP/UDP port number
  - Typical network application
- Strict priority and Weighted Round Robin (WRR) CoS policies
- Traffic-policing policies on the switch port
- DSCP remarking

Multicast

- Supports IGMP snooping v1, v2 and v3
- Supports MLD snooping v1 and v2
- Querier mode support
- IGMP snooping port filtering
- MLD snooping port filtering
- MVR (Multicast VLAN Registration)

Security

- Authentication
  - IEEE 802.1x port-based/MAC-based network access authentication
  - IEEE 802.1x authentication with guest VLAN
  - Built-in RADIUS client to cooperate with the RADIUS servers
  - RADIUS/TACACS+ users access authentication
- Access Control List
  - IP-based Access Control List (ACL)
  - MAC-based Access Control List (ACL)

Featuring Fast Recovery for Critical Network Applications

The Switch supports redundant ring technology and features strong, rapid self-recovery capability to prevent interruptions and external intrusions. It incorporates advanced **ITU-T G.8032 ERPS (Ethernet Ring Protection Switching)** technology, Spanning Tree Protocol (802.1s MSTP), and **redundant power** input system into customer's industrial automation network to enhance system reliability and uptime in harsh factory environments. In a certain, simple Ring network, the recovery time of data link can be as fast as 20ms.

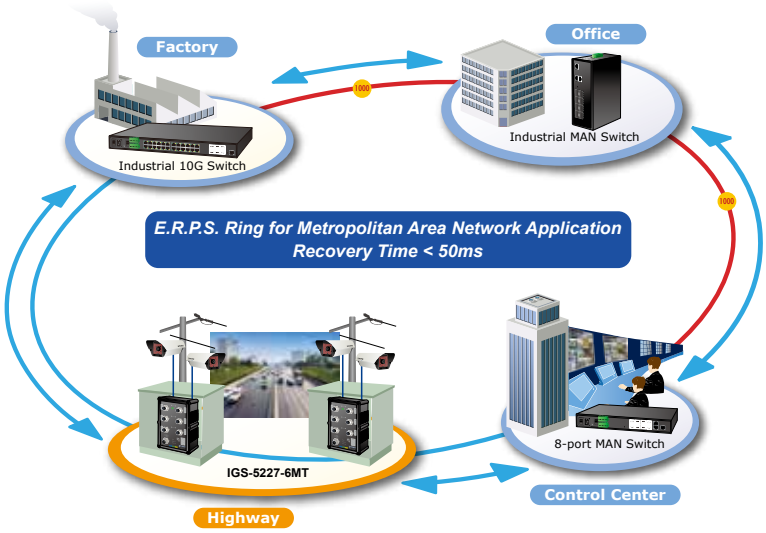

IPv6/IPv4 Dual Stack

Supporting both IPv6 and IPv4 protocols, the IGS-5227-6MT helps data centers, campuses, telecoms, and more to experience the IPv6 era with the lowest investment as its network facilities need not be replaced or overhauled if the IPv6 FTTx edge network is set up.

Layer 3 IPv4 and IPv6 VLAN Routing for Secure and Flexible Management

The IGS-5227-6MT not only provides ultra high transmission performance, and excellent Layer 2 and Layer 4 technologies, but also Layer 3 IPv4/IPv6 VLAN routing feature which allows to cross over different VLANs and different IP addresses for the purpose of having a highly-secure, flexibly-managed and simple networking application.

Robust Layer 2 Features

The IGS-5227-6MT can be programmed for advanced switch management functions such as dynamic port link aggregation, **Q-in-Q VLAN**, private VLAN, **Multiple Spanning Tree Protocol (MSTP)**, Layer 2 to Layer 4 QoS, bandwidth control and IGMP/MLD Snooping. Via the link aggregation of supporting ports, the IGS-5227-6MT allows the operation of a high-speed trunk to combine with multiple fiber ports and supports fail-over as well.

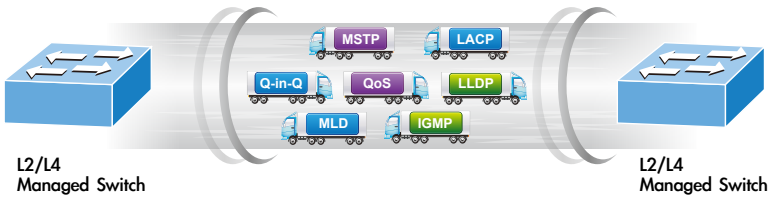

- Source MAC/IP address binding
- **DHCP Snooping** to filter distrusted DHCP messages
- **Dynamic ARP Inspection** discards ARP packets with invalid MAC address to IP address binding
- **IP Source Guard** prevents IP spoofing attacks
- IP address access management to prevent unauthorized intruder

Management

- IPv4 and IPv6 dual stack management
- Switch Management Interfaces
  - Telnet command line interface
  - Web switch management
  - SNMP v1, v2c, and v3 switch management
  - SSH/SSL secure access
- IPv6 address/NTP management
- Built-in Trivial File Transfer Protocol (TFTP) client
- BOOTP and DHCP for IP address assignment
- System Maintenance
  - Firmware upload/download via HTTP/TFTP
  - Reset button for system reboot or reset to factory default
  - Dual images
- DHCP relay and option 82
- User privilege levels control
- NTP (Network Time Protocol)
- Link Layer Discovery Protocol (LLDP) and LLDP-MED
- Network diagnostic
  - Cable diagnostic technology provides the mechanism to detect and report potential cabling issues
  - ICMPv6/ICMPv4 remote ping
- SMTP/Syslog remote alarm
- Four RMON groups (history, statistics, alarms and events)
- SNMP trap for interface link up and link down notification
- PLANET Smart Discovery Utility for deployment management

Powerful Security

The IGS-5227-6MT offers a comprehensive **Layer 2 to Layer 4 Access Control List (ACL)** for enforcing security to the edge. It can be used to restrict network access by denying packets based on source and destination IP address, TCP/UDP ports or defined typical network applications. Its protection mechanism also comprises **802.1X Port-based** and **MAC-based** user, and device authentication. With the **private VLAN** function, communication between edge ports can be prevented to ensure user privacy. The IGS-5227-6MT also provides **DHCP Snooping**, **IP Source Guard** and **Dynamic ARP Inspection** functions to prevent IP snooping from attack and discard ARP packets with invalid MAC address. The network administrators can now construct highly-secure corporate networks with considerably less time and effort than before.

Excellent Traffic Control

The IGS-5227-6MT is loaded with powerful traffic management and **QoS** features to enhance connection services by telecoms and ISPs. The QoS feature includes wire-speed Layer 4 traffic classifiers and bandwidth limit that are particularly useful for multi-tenant units, multi-business units, Telco and network service providers' applications. It also empowers the industrial environment to take full advantage of the limited network resources and guarantees the best performance in VoIP and video conferencing transmission.

Efficient and Secure Management

With built-in Web-based management interface, the IGS-5227-6MT L2+ Managed Switch offers an easy-to-use, platform-independent management and configuration facility which includes Web and SNMP management interfaces. The SNMP can be managed via any management software based on the standard of SNMP Protocol. For reducing product learning time, it offers Cisco-like command via Telnet and customer does not need to learn new console command. Moreover, it also offers secure remote management by supporting SSH, SSL and SNMP v3 connections which encrypt the packet content at each session.

1588 Time Protocol for Industrial Computing Networks

The IGS-5227 series is ideal for telecom and Carrier Ethernet applications, supporting MEF service delivery and timing over packet solutions for IEEE 1588 and synchronous Ethernet.

Modbus TCP provides Flexible Network Connectivity for Factory Automation

With the supported Modbus TCP/IP protocol, the IGS-5227 series can easily integrate with SCADA systems, HMI systems and other data acquisition systems in factory floors. It enable administrators to remotely monitor the industrial Ethernet switch's operating information, port information and communication status, thus easily achieving enhanced monitoring and maintenance of the entire factory.

Applications

High Availability Networking Solution for Surveillance System

The Switch has the capability to rapidly recover itself in case there are interruptions or external instrusions. As the **ITU-T G.8032 ERPS** is employed, the reliability and uptime of the network can be greatly enhanced. Thus, the IGS-5227-6MT, with its redundant connection and high bandwidth, is ideal for building an IP-based surveillance infrastructure in public transportation.

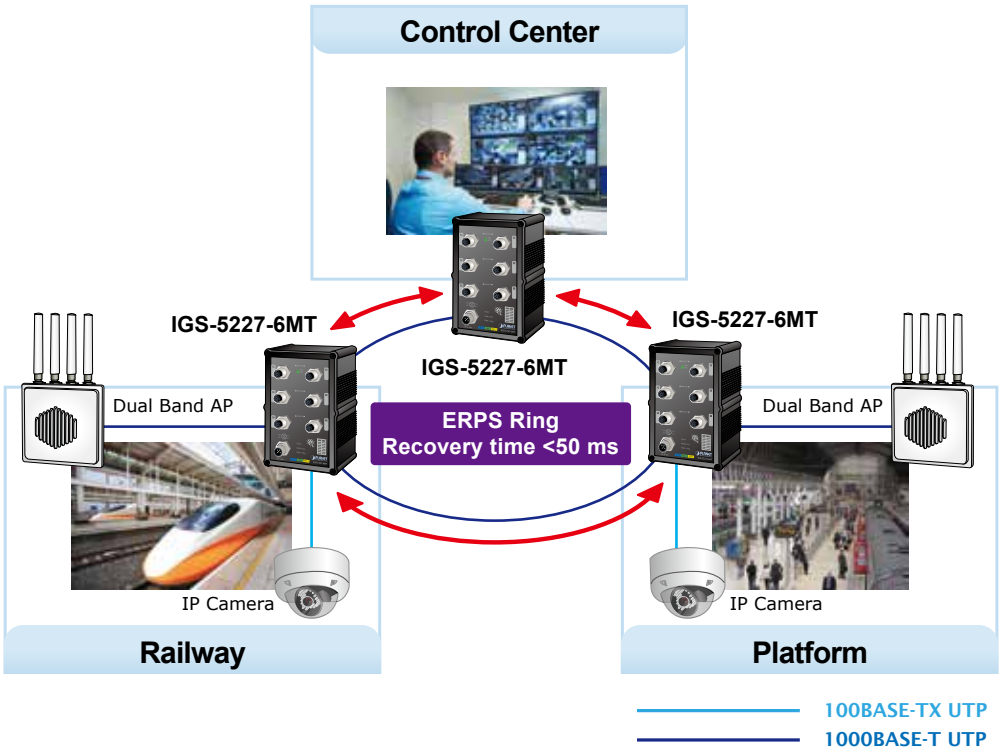

Layer 2+ VLAN Static Routing

With the built-in robust Layer 3 routing protocols, the IGS-5227-6MT ensures reliable routing between VLANs and network segments. The routing protocols can be applied by VLAN interface with up to 32 routing entries. The IGS-5227-6MT, certainly an ideal solution for industries, offers greater security, control and bandwidth conservation, and high-speed uplink.

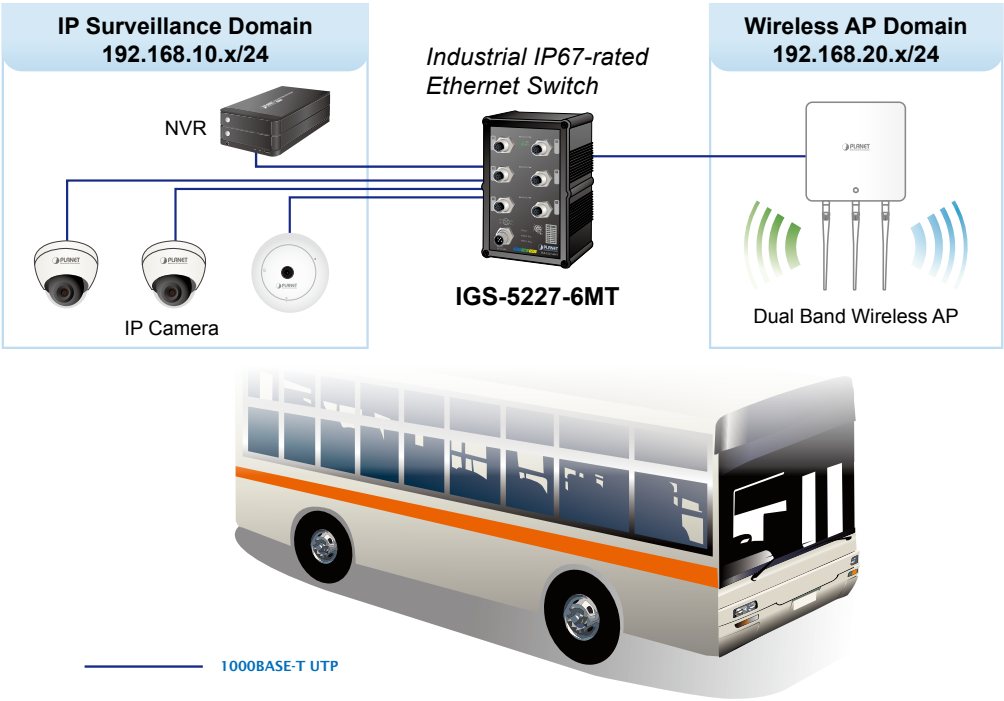

Specifications

Product	IGS-5227-6MT
Hardware Specifications	
Copper Ports	6 x M12, 8-pin A-coded female connector, 10/100/1000BASE-T auto-MDI/MDI-X ports
Power Connector	1 x M12, 5-pin A-coded male connector
Switch Architecture	Store-and-Forward
Switch Fabric	12Gbps/non-blocking
Throughput	8.9Mpps@64bytes
Address Table	8K entries, automatic source address learning and aging
Shared Data Buffer	4M bits
Flow Control	IEEE 802.3x pause frame for full-duplex Back pressure for half-duplex
Jumbo Frame	9K bytes
Dimensions (W x D x H)	103 x 68.2 x 163 mm
Weight	1069g
Enclosure	IP67 aluminum case
Installation	Wall-mount kit and DIN-rail kit
LED	System: PWR1 (Green), PWR2 (Green), Fault (Red) Ring (Green), R.O. (Green) 10/100/1000T RJ45 Interfaces LNK/ACT (Green)
Power Consumption	Max. 8.2 watts/ 28.1 BTU
Power Requirements	Dual 9~48V DC, 24V AC
ESD Protection	6KV DC
Layer 2 Management Functions	
Port Configuration	Port disable/enable Auto-negotiation 10/100/1000Mbps full and half duplex mode selection Flow control disable/enable
Port Status	Display each port's speed duplex mode, link status, flow control status, auto-negotiation status, trunk status
Port Mirroring	TX/RX/Both Many-to-1 monitor
VLAN	802.1Q tagged-based VLAN Q-in-Q tunneling Private VLAN Edge (PVE) MAC-based VLAN Protocol-based VLAN Voice VLAN IP Subnet-based VLAN MVR (Multicast VLAN registration) Up to 255 VLAN groups, out of 4095 VLAN IDs
Link Aggregation	IEEE 802.3ad LACP/static trunk 3 groups with 2 ports per trunk
Spanning Tree Protocol	IEEE 802.1D Spanning Tree Protocol (STP) IEEE 802.1w Rapid Spanning Tree Protocol (RSTP) IEEE 802.1s Multiple Spanning Tree Protocol (MSTP)
IGMP Snooping	Traffic classification based, strict priority and WRR 8-level priority for switching: - Port number - 802.1p priority - 802.1Q VLAN tagging - DSCP/ToS field in IP packet
IGMP Snooping	IGMP (v1/v2/v3) snooping, up to 255 multicast groups IGMP querier mode support
MLD Snooping	MLD (v1/v2) snooping, up to 255 multicast groups MLD querier mode support
Access Control List	IP-based ACL/MAC-based ACL Up to 256 entries
Bandwidth Control	Per port bandwidth control Ingress: 100Kbps~1000Mbps Egress: 100Kbps~1000Mbps

Layer 3 Functions		
IP Interfaces	Max. 8 VLAN interfaces	
Routing Table	Max. 32 routing entries	
Routing Protocols	IPv4 software static routing IPv6 software static routing	
Management		
Basic Management Interfaces	Telnet; Web browser; SNMP v1, v2c	
Secure Management Interfaces	SSH/SSL, SNMP v3	
SNMP MIBs	RFC 1213 MIB-II RFC 1493 Bridge MIB RFC 1643 Ethernet MIB RFC 2863 Interface MIB RFC 2665 Ether-Like MIB RFC 2819 RMON MIB (Groups 1, 2, 3 and 9) RFC 2737 Entity MIB RFC 2618 RADIUS Client MIB	RFC 2863 IF-MIB RFC 2933 IGMP-STD-MIB RFC 3411 SNMP-Frameworks-MIB RFC 4292 IP Forward MIB RFC 4293 IP MIB RFC 4836 MAU-MIB IEEE 802.1X PAE LLDP
Standards Conformance		
Regulatory Compliance	FCC Part 15 Class A, CE	
Stability Testing	IEC60068-2-32 (free fall) IEC60068-2-27 (shock) IEC60068-2-6 (vibration)	
Standards Compliance	IEEE 802.3 10BASE-T IEEE 802.3u 100BASE-TX IEEE 802.3ab Gigabit 1000T IEEE 802.3x flow control and back pressure IEEE 802.3ad port trunk with LACP IEEE 802.1D Spanning Tree Protocol IEEE 802.1w Rapid Spanning Tree Protocol IEEE 802.1s Multiple Spanning Tree Protocol IEEE 802.1p Class of Service IEEE 802.1Q VLAN tagging IEEE 802.1X Port Authentication Network Control IEEE 802.1ab LLDP	IEEE 802.3az EEE (Energy Efficient Ethernet) RFC 768 UDP RFC 793 TFTP RFC 791 IP RFC 792 ICMP RFC 2068 HTTP RFC 1112 IGMP v1 RFC 2236 IGMP v2 RFC 3376 IGMP v3 RFC 2710 MLD v1 RFC 3810 MLD v2 ITU-T G.8032 ERPS (Ethernet Ring Protection Switching)
Environment		
Operating	Temperature: -40 ~ 75 degrees C Relative Humidity: 5 ~ 95% (non-condensing)	
Storage	Temperature: -40 ~ 80 degrees C Relative Humidity: 5 ~ 95% (non-condensing)	
Standard Accessories		
Packet Contents	1 x 8-pin A-code M12-to-RJ45 UTP cable, 2m 1 x M12 5-pin A-coded female connector power cable, 1.2m 1 x Wall-mount kit 1 x DIN-rail kit 1 x Quick Installation Guide 6 x M12 Female Dust Cap 1 x M12 Power Waterproof Cap	

Drawing

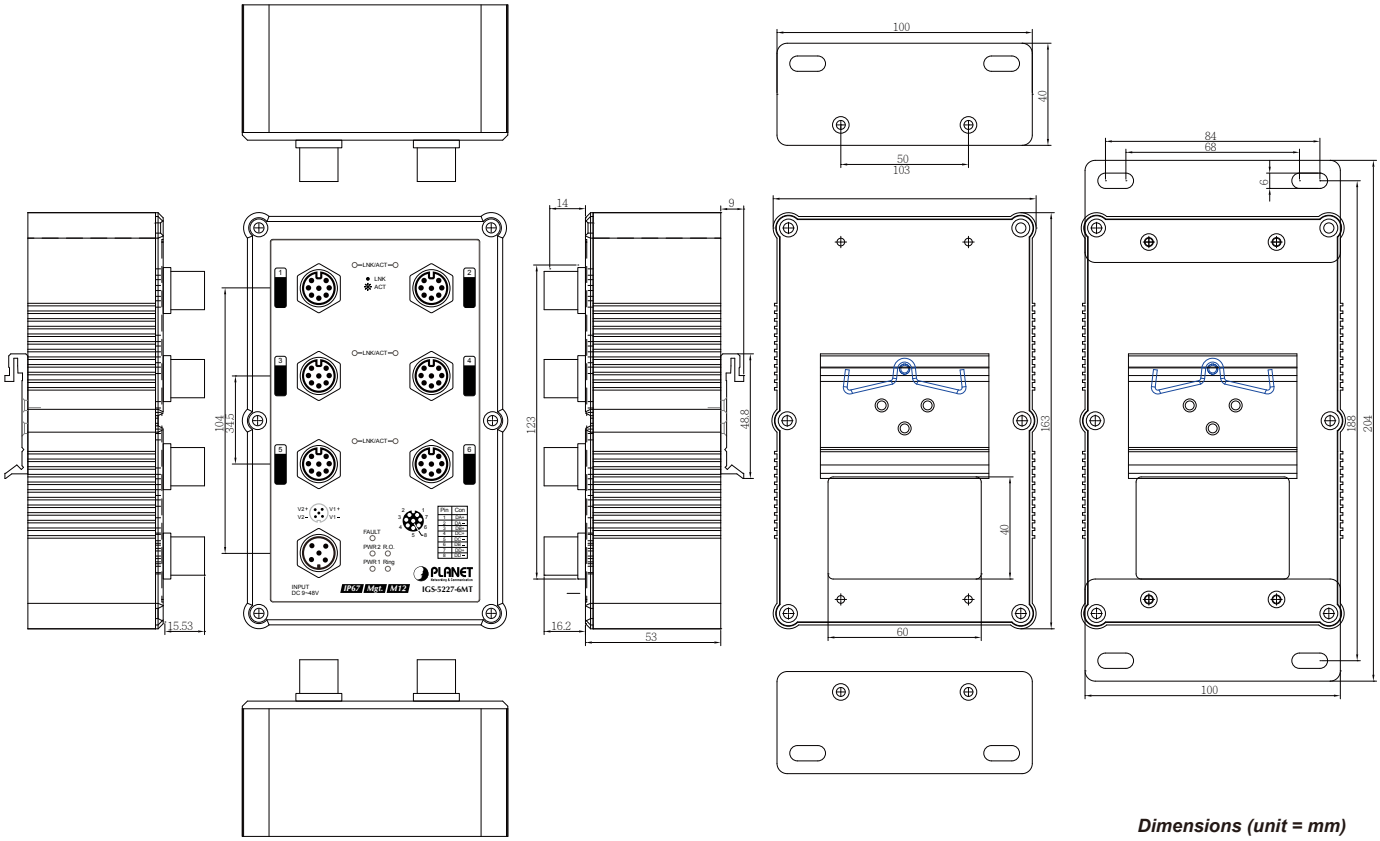

Dimensions (unit = mm)

Ordering Information

IGS-5227-6MT	Industrial IP67-rated 6-Port 10/100/1000T M12 Managed Ethernet Switch (-40~75 degrees C, A-coded M12)

Related Products

IGS-5227-6T	Industrial IP67-rated 6-Port 10/100/1000T Managed Ethernet Switch (-40~75 degrees C)
IGS-5227-6MT-X	Industrial IP67-rated 6-Port 10/100/1000T M12 Managed Ethernet Switch (-40~75 degrees C, X-coded M12)
IGS-604HPT-RJ	Industrial IP67-rated 4-Port 10/100/1000T 802.3at PoE + 2-Port 10/100/1000T Managed Ethernet Switch (-40~75 degrees C)
IGS-604HPT-M12	Industrial IP67-rated 4-Port 10/100/1000T 802.3at PoE + 2-Port 10/100/1000T Managed Ethernet Switch (-40~75 degrees C)
IGS-5226-4P2T	Industrial EN50155 4-Port 10/100/1000T 802.3at PoE + 2-Port 10/100/1000T Managed Ethernet Switch (-40~75 degrees C)
ISW-800T-M12	Industrial IP67-rated 8-Port 10/100Mbps M12 Ethernet Switch (-40~75 degrees C)
ISW-804PT-M12	Industrial IP67-rated 8-Port 10/100Mbps M12 Ethernet Switch with 4-Port PoE (-40~75 degrees C)

Accessories

CB-M12A8MRJ-200	8-pin A-coded M12 Male to RJ45 Ethernet Cable (2 meters)

PLANET Technology Corporation

11F., No.96, Minquan Rd., Xindian Dist., New Taipei City
231, Taiwan (R.O.C.)
Tel: 886-2-2219-9518 Fax: 886-2-2219-9528
Email: sales@planet.com.tw www.planet.com.tw

PLANET reserves the right to change specifications without prior notice. All brand names and trademarks are property of their respective owners. Copyright © 2017 PLANET Technology Corp. All rights reserved.